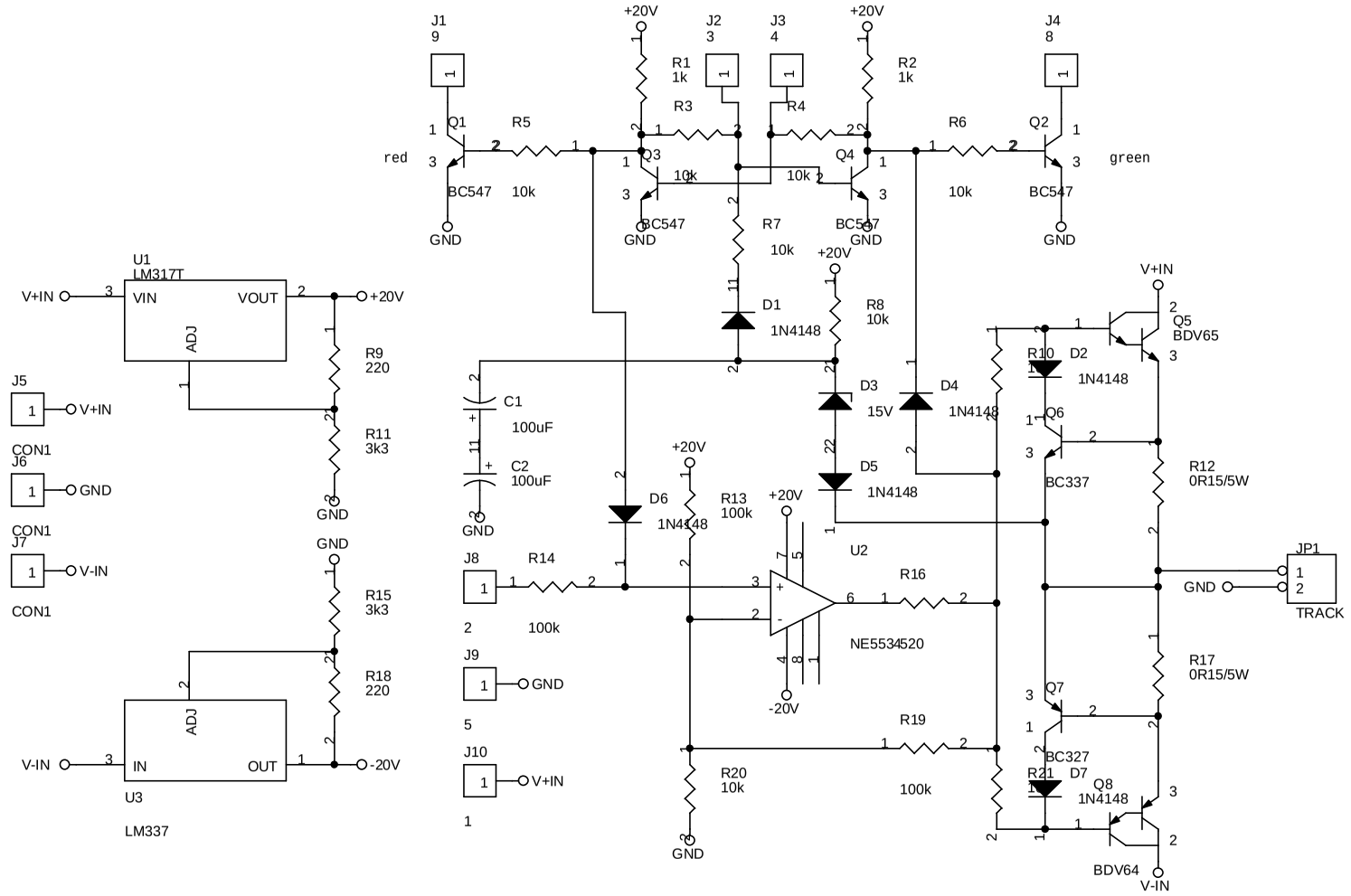
J1
9
Q1
BC547
red
R5
10k
GND
+20V
R1
1k
R3
10k
Q3
BC547
GND
J2
3
J3
4
R4
10k
Q4
BC547
GND
R2
1k
R6
10k
Q2
BC547
green
GND
R7
10k
D1
1N4148
R8
10k
D3
15V
D4
1N4148
D5
1N4148
C1
100uF
C2
100uF
D6
1N4148
R13
100k
U2
NE5534
R14
100k
R16
520
R19
100k
R20
10k
-20V
J4
8
V+IN
Q5
BDV65
R10
D2
1N4148
Q6
BC337
R12
0R15/5W
R17
0R15/5W
Q7
BC327
R21
D7
1N4148
Q8
BDV64
V-IN
JP1
TRACK
J8
2
J9
5
J10
1
U1
LM317T
VIN
VOUT
ADJ
R9
220
R11
3k3
J5
CON1
J6
CON1
J7
CON1
R15
3k3
R18
220
U3
LM337
IN
OUT